PS100-WT

One-phase inverter
for small three-phase wind turbines
with permanent magnet synchronous generators

1 kW, 3 kW, 5.5 kW

User's manual

ver.5.1en pv1.1

Contents

1. Device description

The family of single-phase, high efficiency and transformerless PT100-WT inverters is designed for work with small wind turbines permanent magnet synchronous generators, with an electric power of up to 5.5 kW. These inverters converts the energy obtained from the wind power plant to a single-phase power grid (so-called "on-grid" systems). They operate fully autonomously. After being installed by an authorized person, the user's role is limited to systematic monitoring of the device's condition (failure, flooding, etc.).

Some parts of this User's manual are common to other of our products for Renewable Energy Sources (RESs): photovoltaic inverters, hybrid inverters, inverters with build-in battery chargers. The PS100-WT inverter refers to fragments in which wind turbine (permanent magnet) generator, AC generator or in general Renewable Energy Sources (RESs) are mentioned. The sections in which photovoltaic sources, off-line inverters and battery chargers are referred to relate to another product.

Before starting work, the 16-point characteristics of the generator's input current as a function of its frequency should be entered to the inverter. In addition, the load control of the synchronous generator can be controlled by directly setting the load current using the MODBUS communication protocol (RTU, TCP / IP).

Limitation of liability

Despite all efforts and due diligence, the Zakład Energoelektroniki TWERD (TWERD Power Electronics) does not guarantee that the published data is free of errors. In case of any doubts or the desire to obtain additional information, please contact us. All trademarks used are the property of their respective owners.

2. Conditions of safe operation

Before start to work with the PS100 inverter read carefully this User’s manual. Not knowing or ignorance of the information contained in it can cause physical injury, death or damage to the inverter.

In the further part of this User manual, the PS100-WT inverter, to which this instruction applies, will also be referred to as the „PS100-WT or "device".

RISK OF ELECTRIC SHOCK

HOT SURFACE

2.1. Warnings

- Incorrect installation, using, and maintenance of the device can cause physical injury or death, or damage to the device and connected equipment.
- Some housing components, including a heat sink, can get hotter than 80 ° C during normal operation - there is a risk of burns.
- Installation, using, and maintenance of the device must be performed only by qualified personnel.
- Before switching on the voltage, make sure the device has been correctly installed and all housing elements have been properly assembled.
- After connecting the device to the supply voltage its internal components (without the control terminals – pic. 9.1 on page 19) are on the power supply potential. Touching these components can cause an electric shock.
- The device contains DC-link circuit capacitors that can remain charged even when the device is not powered. It can cause an electric shock. The time required for self-discharge of capacitors in an undamaged device is usually less then 5 minutes. Before starting any installation works **wait 5 minutes** after disconnecting all power supplies sources and make sure that a voltage on a clamps is not present.

  Attention! The lack of the voltage at the connection terminals is not synonymous with the lack of dangerous voltage in the internal DC-link circuit of the device.
- Don’t make any connections changes when the device is connected to the power supply.
- Due to the use of a transformer-free topology of the charger, and thus connecting the negative pole

of the battery bank to the inverter's intermediate circuit, there are dangerous voltage and life-threatening voltage on the terminals of the battery bank. It is forbidden to touch the terminals of the battery bank, because it may cause an electric shock!

2.2. Basic rules

- The inverter should not be connected to cooperate with the synchronous generator without load resistors, as this may lead to the turbine to run out, and consequently damages for which the manufacturer is not responsible.
- Do not make any connections when the electrical voltage is supplied to the inverter: from the mains side, photovoltaic panels, wind turbine generator, battery bank.
- Don’t measure the voltage endurance of any unit devices.
- To measure the cables insulation it is necessary to disconnect them from the device.
- Don’t touch integrated circuits and any other parts on the device’s electronic board, as they can be damaged by electrostatic discharge.
- Ensure that no other passive components, such as resistors, capacitors, or coils, are connected to the power cables.
- Any modifications or self-repairs of the device can cause physical injury or death, or damage to the device and connected equipment. Any attempt at self-repair will void any warranty.
- After disassembling the front cover of the inverter, access to the buttons of the operator panel and simultaneously to the elements that are, under the conditions of normal operation of the inverter, under the electrical voltage dangerous for life and health (active parts) are obtained.

  ATTENTION: Take particular care due to the possibility of electric shock. Removing the front cover of the inverter (when the electrical voltage is supplied to the device both from the network side and the generator) and changing the settings can only be made by a person with appropriate electrical qualifications.
- Periodically, you should check:
  - Connection of protective conductors,
  - Wiring (the connections, insulation),
  - Did not water get inside the system,
  - Degree of heat sink dirtiness.

2.3. Protection against electric shock

Protective conductor must be connected to inverter’s PE terminal on terminal strip.

The device has built-in protection against earth fault currents, but it only protects the device and does not protect the user against electric shock.

2.4. Operation list after receiving the device

- After unpacking the device, it is necessary to check up visually presence of damages which could arise during the transport.
- Check up the correspondence between the delivered frequency converter and the order - check up the ratings plate on the case.
- Check up the correspondence between conditions in which the converter will be used and conditions of an environment for which it is designed
- Installation of the frequency converter should be made according to principles of safety and EMC rules.

2.5. Environmental conditions

a. Degree of pollution

During design second degree of pollution has been assumed, at which there are normally only non-conducting pollution. However there is a probability of temporary conductivity caused by a condensation,

when the device is disconnected from the voltage source.

In case the environment in which the devicewill work, contains pollution which can influence its safety, it is necessary to apply appropriate counteraction, using, for example, additional cases, air channels, filters etc.

b. Climatic conditions

Table 2.1. Installation, warehousing and transport conditions

	Installation site	**During warehousing**	**During transport**
Temperature	-10 ºC .. +40 ºC	-25 ºC .. +55 ºC	-25 ºC .. +70 ºC
		In protective packing	
Relative humidity	5 % .. 95 %	5 % .. 95 %	Max 95 %
	Short-term, insignificant condensation on the external side of the device case is permitted only when the device is disconnected from the voltage source.		
Air pressure	86 kPa .. 106 kPa	86 kPa .. 106 kPa	70 kPa .. 106 kPa

2.6. Recycle

Always return your used electronic products, batteries, and packaging materials to dedicated collection points. This way you help prevent uncontrolled waste disposal and promote the recycling of
materials.

3. Specification

3.1. Technical data

Table 3.1. PS100 inverters technical data

No.	Type			PS100		
				1kW	3kW	5.5kW
	Description	**Name**	**Unit**			
1	Working voltage range from the AC generator side	Ugen	V	3 x 60..280 V AC		
2	Rated voltage from the AC generator side	Ugen-n	V	3 x 230 V AC		
3	Maximum input current from the AC generator side	Igen-max	A	7A	13A	PS100H/5.5kW: 13A PS100WT/5.5kW: 24A
4	Voltage range from the PV side	Upv	V	70..450 V DC		
5	Maximum current of PV panels	Ipv-max	A	7A	13A	PS100H/5.5kW: 13A PS100PV/5.5kW: 2x13A
6	Type of PV connector	-	-	MC4		
7	Efficiency (at rated output power)	η	%	97%		
8	Nominal AC output power	Pn	kW	1	3	5.5
9	Output voltage (from the power grid side)	Uout	V	1 x 230V, 50Hz		
10	The rated output current	Iout	A	4,5	13	25
11	Current THD		%	< 3		
12	Nominal voltage of DC-link circuit	Udc	V	380V		
13	Maximum voltage of DC-link circuit	Udc-max	V	600V		
14	Transistors switching frequency	fsw	kHz	16		
15	Maximum temperature of heatsink	Trad-max	ºC	85		
16	Communication	-	-	Ethernet, RS485		
17	Digital inputs	DI1..DI5	szt.	5		
18	Relay outputs NO 2A 230V AC	K1, K2, K3	szt.	3		
19	Protections	- before run-up - before too high device temperature, - the monitoring system of the power grid parameters				
20	MPPT:	• synchronous generator input (AC): chracteristic *Igen=f(fgen)* defined by user. • PV input (DC): tracking system				
21	Power consumption in standby mode	-	W	2		
22	Humidity	-	%	85% dla 40ºC		
23	Ambient temperature range	-	ºC	-10ºC..+40ºC		
24	IP protection	-	-	IP51		
25	Weight	-	kg	Look at the chapter 3.2 *Mechanical dimensions and weight on page 8.*		
Devices with battery charger module						
26	Nominal voltage of battery	Ubat-n	V	48/96 Vdc		
27	Nominal charging/discharging current	Ibat-max	A	50 Adc		

3.2. Mechanical dimensions and weight

3.2.1. PS100-WT/1kW, PS100-WT/3kW

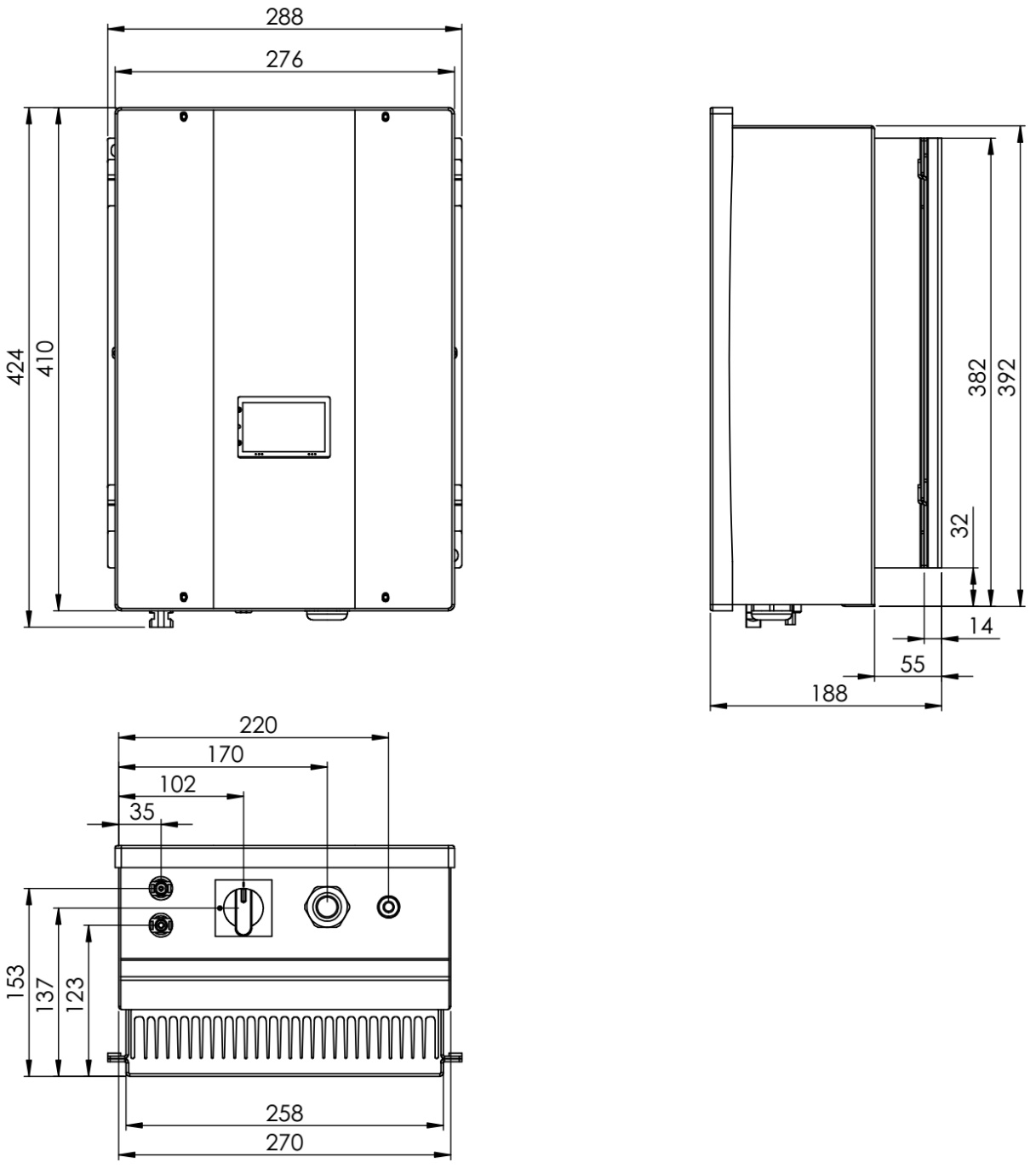

Pic.3.1. Mechanical dimensions of the inverter

Weight of the inverter with mounting frame: 14 kg.

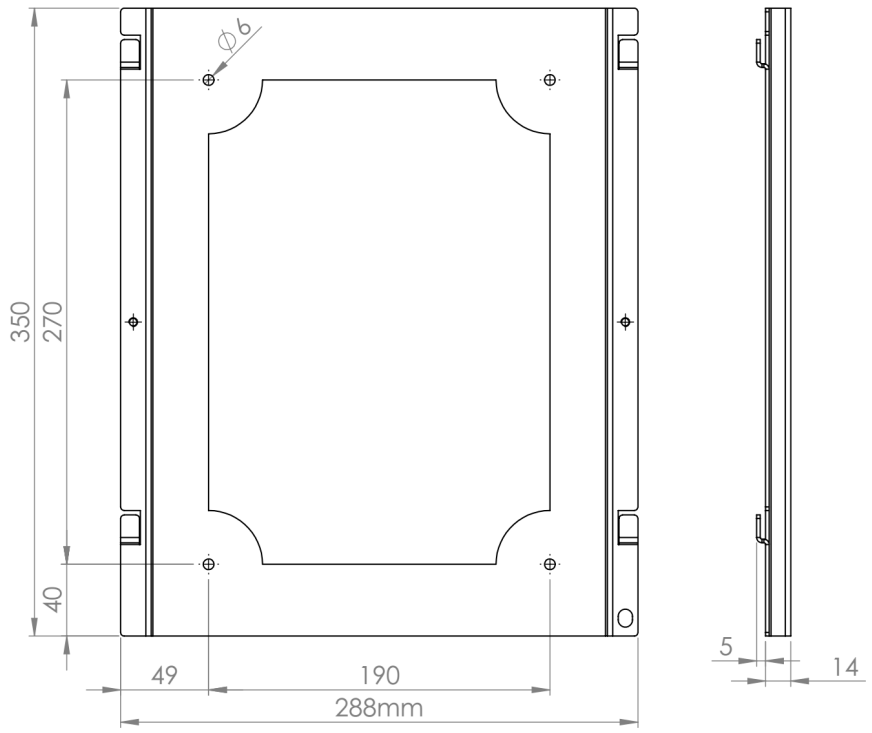

Rys.3.2. Mechanical dimensions of the mounting frame

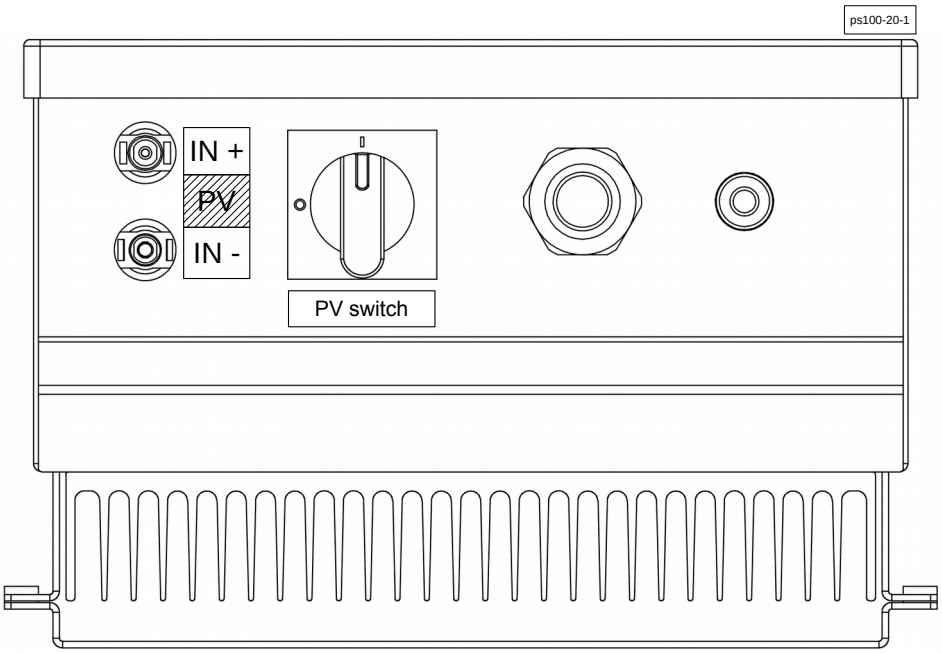

Pic.3.3. Inverter view from the connectors side

Note: there are no PV connectors and a PV switch in the PS100-WT inverters, and there are rubber glands installed in their place.

3.2.2. PS100-WT/5.5kW

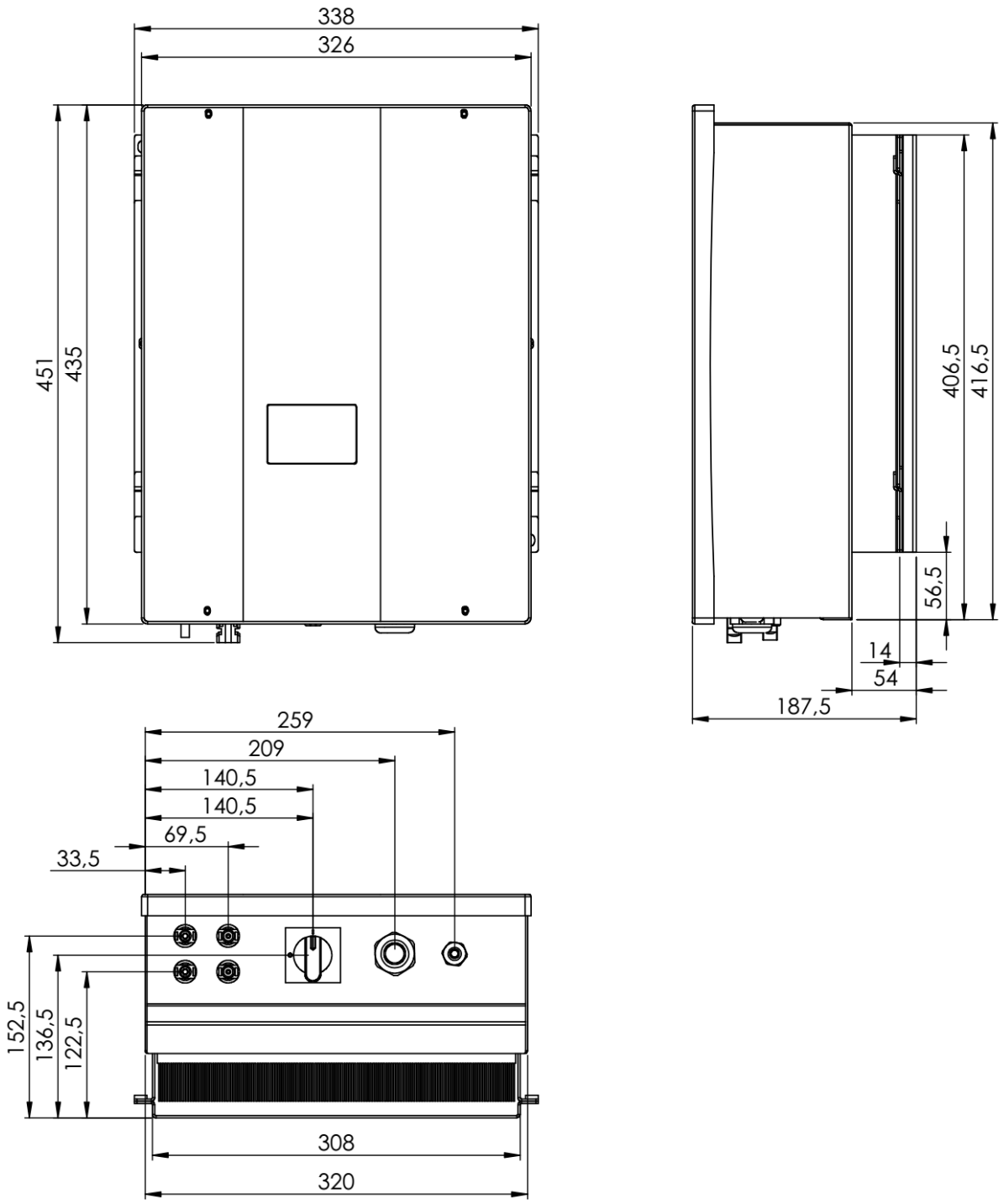

Pic.3.4. Mechanical dimensions of the inverter

Weight of the inverter with mounting frame: 16 kg.

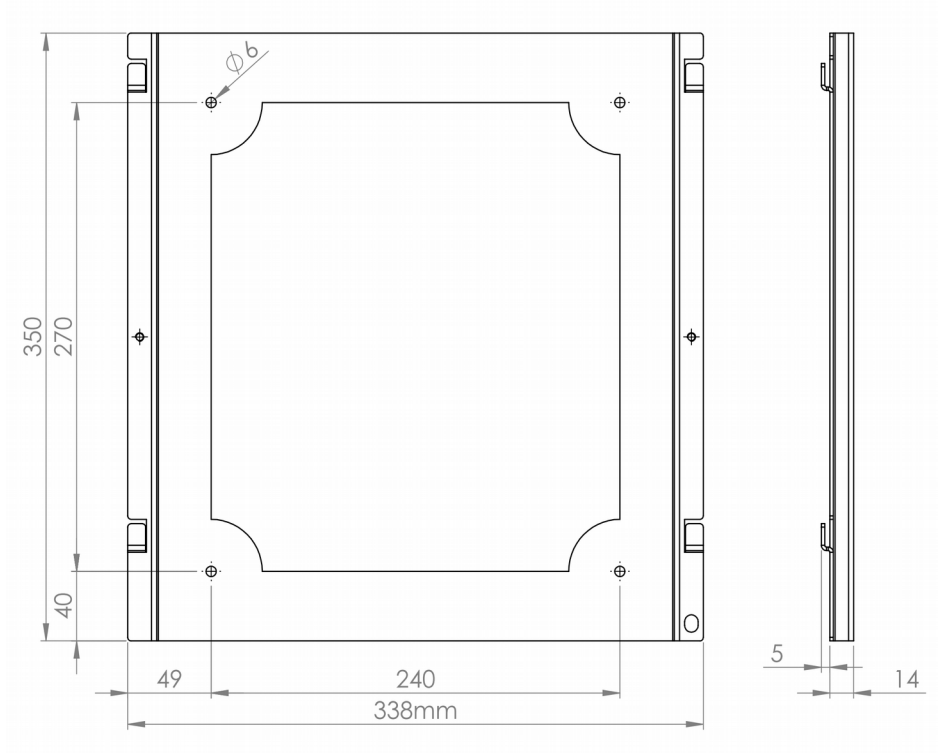

Pic.3.5. Mechanical dimensions of the mounting frame

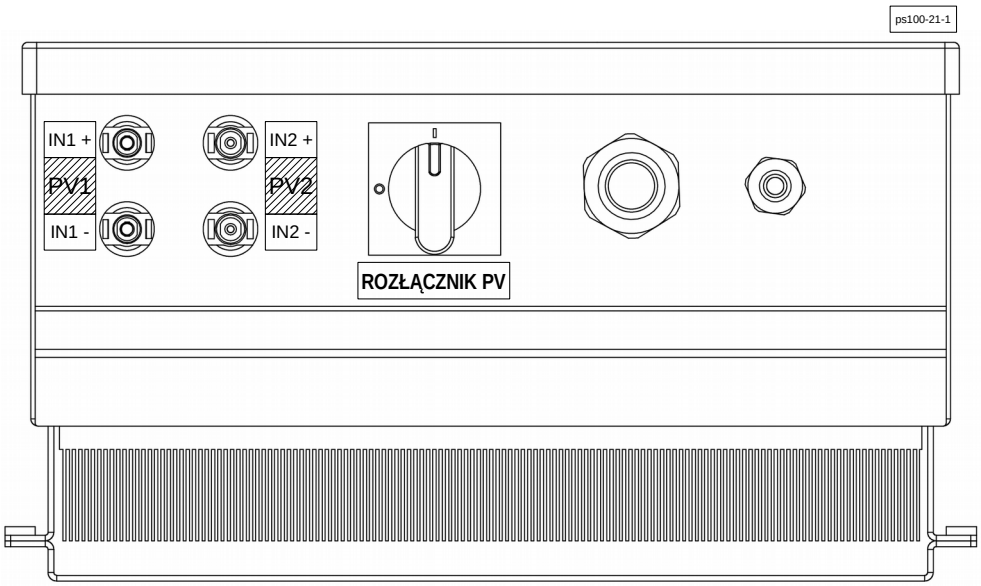

Pic.3.6. Inverter view from the connectors side

Note: there are no PV connectors and a PV switch in the PS100-WT and PS100-H inverters, and there are rubber glands installed in their place.

4. Prepare for installation

4.1. Inverter installation location

- The inverter is suitable for installation indoors and outdoors.
- The inverter has an IP51 protection rating and this should be taken into account when selecting the mounting location.
- In order to minimise the heating up of the inverter, do not expose it to direct insolation. Install the inverter in a protected location.
- The inverter must not be installed or used at altitudes above 2500 m n.p.m.
- All inverters are design to be dust-tight. However, in areas with a heavy build-up of dust, the thermal efficiency may still be impaired by dust forming on the cooling surfaces. Regular cleaning is necessary in such situations. It is therefore not recommended to mount the device in rooms or areas in which a strong formation of dust is expected.
- Do not install the inverter in::
  - flammable or explosive atmosphere because it could cause fire or explosion,
  - areas where ammonia, corrosive vapours, acids or salts are present (e.g. fertiliser stores, ventilation openings from cattle sheds, chemical plants, tanneries, etc.),
  - places where there is an increased risk of damage from farm animals (horses, cattle, sheep, pigs, etc.),
  - stables or adjoining areas,
  - storage areas for hay, straw, chaff, animal feed, fertilisers, etc.,
  - greenhouses,
  - storage or processing areas for fruit, vegetables or winegrowing products,
  - places used to prepare grain, green fodder or animal feeds.
- As the inverter generates low levels of noise under certain operating conditions, it should not be installed close to living areas.

4.2. Environmental condition

The PS100 inverter should work in dry rooms with little dust. Ambient temperature should not exceed 40°C and relative humidity 85% according to tab. 2.1 on page 6.

4.3. Cooling

In order to ensure the required air circulation, the inverter should be mounted so as to keep a free space of at least 20 cm from the top and bottom and 10 cm from both sides. When installing in a closed enclosure, use ventilation openings. It is advisable to use an additional fan. Prevent dust from settling on the heat sink surface. The radiator should be cleaned from time to time.

4.4. Installation position

The inverter is designed to be installed vertically on a vertical wall (±15 degree) with connectors facing downwards. The inverter is <u>not designed</u> to be installed in aby others positions, especially:

- in horizontal position,
- on sloping surface,
- when connectors facing downwards,
- on the ceiling,
- overhangs with its connection sockets facing upwards.

First, fix the mounting plate with 4 screws. Then hang the inverter on this board and secure it with two screws and an optional padlock.

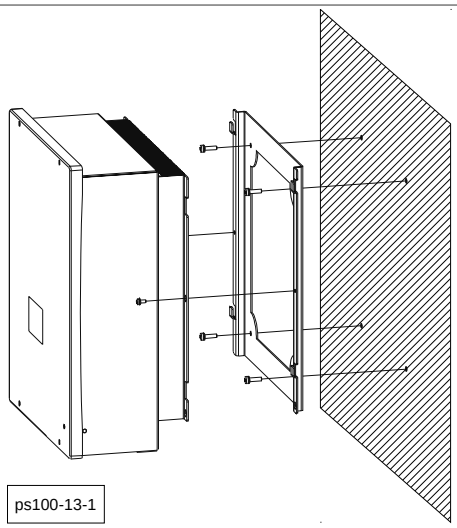

Pic.4.1. Wall mounting

4.5. Power circuit terminals

Figure 5.1 shows an electrical diagram of power cables connections. The power electric circuit is connected to the terminal strip, which is located on the bottom plate of the device. On it there are also fuses of a value depending on the inverter power - table 4.1.

Blow of fuse can be caused by incorrect operation of the inverter or connected to it electric circuits. Replacing the fuse without analysing the cause of the failure may result in more severe damage to the inverter that is not covered by the warranty. For this reason, the replacement of fuse can only be done by the manufacturer's service.

Access to the power circuit terminals is obtained by removing the front cover of the inverter.

Table 4.1. Internal DC and power supply lines fuses values

PS100	Internal DC protection fuse (RESs side)	Fuse protection from electrical grid side
1 kW	12A DC	B16
3 kW	16A DC	B20
5.5 kW	2 x 16A DC	B32

5. ON-GRID installation

Applies to:

- PS100-WT,
- PS100-PVT,
- PS100-H.

ATTENTION: Do not make any connections when the electrical voltage is supplied to the inverter: from the power line side, photovoltaic panels, wind turbine generator, battery pack.

There are two kind of inputs:

- **AC input:** permanent magnet synchronous generator input - **PS100-WT** and **PS100-H** inverters;
- **DC input**: photovoltaic panels input - **PS100-PV** and **PS100-H** inverters.

Installation operations must be carried out in accordance with chapter 5.1. After their execution, the inverter will be ready for autonomous operation without user intervention.

The user can obtain information about the current state of the device using the communication bus (RS-485, Ethernet) or directly from the control panel. Detailed description of communication configuration with the inverter can be found in chapter 10.

ATTENTION:

When installing the inverter, it should be remembered that the electric circuit on the generator side must be galvanically separated from the power line supply. Additional measurement circuits between the generator and the inverter must also comply with this principle. Otherwise, the inverter it can work incorrectly or even damage that will not be covered by the warranty.

5.1. Inverter with AC input

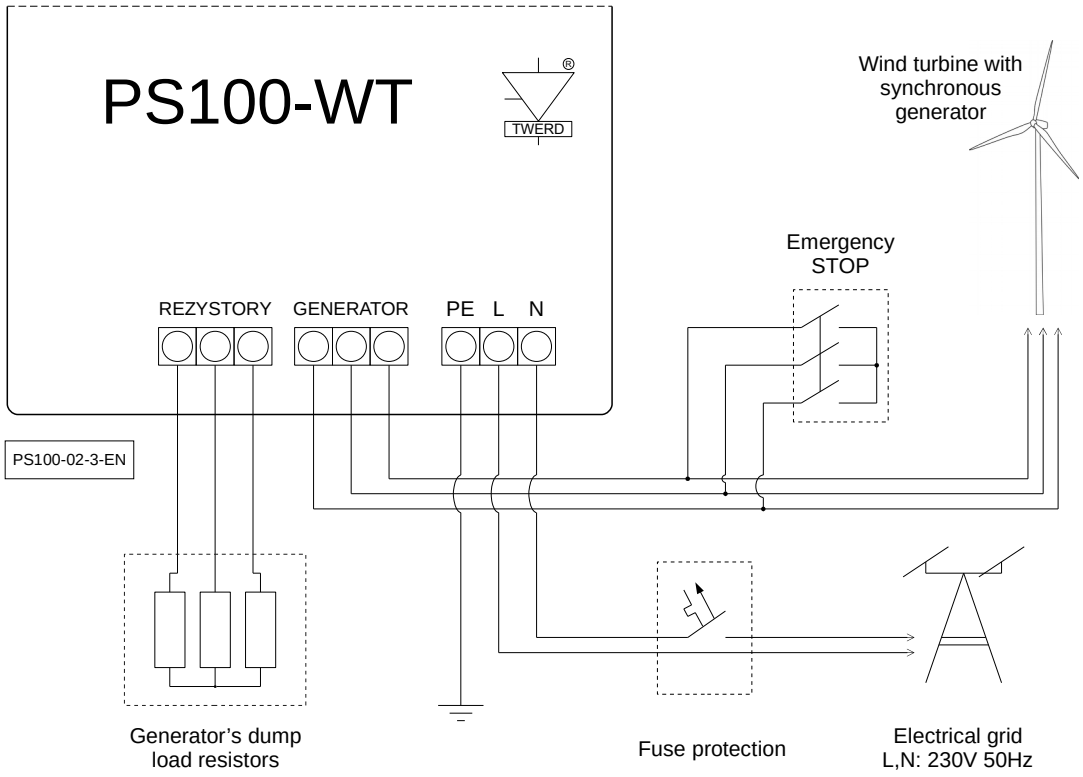

Pic. 5.1. Power circuits wiring diagram for PS100-WT inverter

The order of installation operations:

1. **Switch On** the Emergency STOP.
2. Unscrew the inverter cover by 4 screws.
3. Connect the generator wires to GENER. terminal strip.
4. Connect the generator load resistors to RESIST. terminal strip.
5. Be sure that there is no dangerous voltage on wires(!) and then connect to L,N,PE terminal strip the electrical line.
6. Switch On the power from public electric side.
7. Set the inverter parameters: load characteristic in group 1, breaking parameters in group 11, the point of start and stop of generator in parameters: 12.1, 13.5 i 13.6. Detailed description is placed in chapter 7.
8. Refasten the inverter cover by four screws.
9. Switch OFF the Emergency STOP.
10. Wait a while to ensure that inverter did not signal the fault.

6. Built-in control panel

Warning! Be especially careful due to the possibility of electric shock!

Access to the control panel is obtained after removing the front cover of the inverter. After disassembling the front cover of the inverter, at the same time, access to elements that are, under the conditions of normal inverter operation, under the electrical voltage dangerous to life and health (active parts) is obtained.

Removing the front cover of the inverter (when the electric voltage is supplied to the device both from the network side and the generator) and changing the settings can only be made by a person with appropriate electrical qualifications.

It is not necessary to disassemble the front cover for daily use of the inverter. The built-in impact sensor detects a slight knock on the inverter cover and allows an overview of the basic operating parameters contained in the "*basic view*".

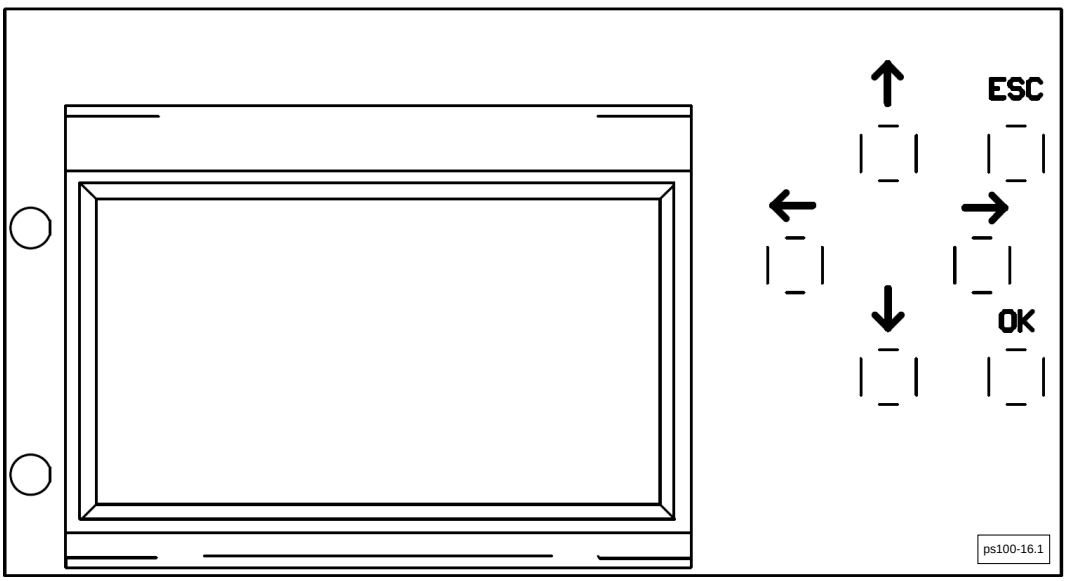

Pic. 6.1. Control panel

Table 6.1. Status diodes

Diode colour	Type of light	Description
-	Diodes are switch off, the control panel shows basic informations	Generated power is to low, inverter is in standby mode
Green	Flashing light	Inverter is ready to work
	Continuous light	Inverter is working
Red	Continuous light	Fault

To enter the „*main menu”*, press the <OK> key. To navigate in the *„main menu”*, use the <up> <down> and <right> <left> keys. The highlighted option is selected by pressing the <OK> key, the return to the „*main menu”* is done by pressing the <ESC> key.

If there is a need to change parameter settings from password protected groups (groups: 2, 10, 12 and 13), please contact the manufacturer of the inverter.

7. The first run

The inverter loads the wind power generator based on a 16-point characteristic:

$$I = f(\omega)$$

where: ω – generator frequency,

I – current limit [%] in relation to nominal current set in par. 1 group 1.

Points (ω,I) are set by user using the "control panel" – group 1, see chapter 12.

A superior current limit is imposed on the characteristic curve (**par. 12.17 „DC curr limit 2"**), the maximum value of which results from the technical capabilities of the device. However, you can set the lower values by trimming the characteristics as in the figure below.

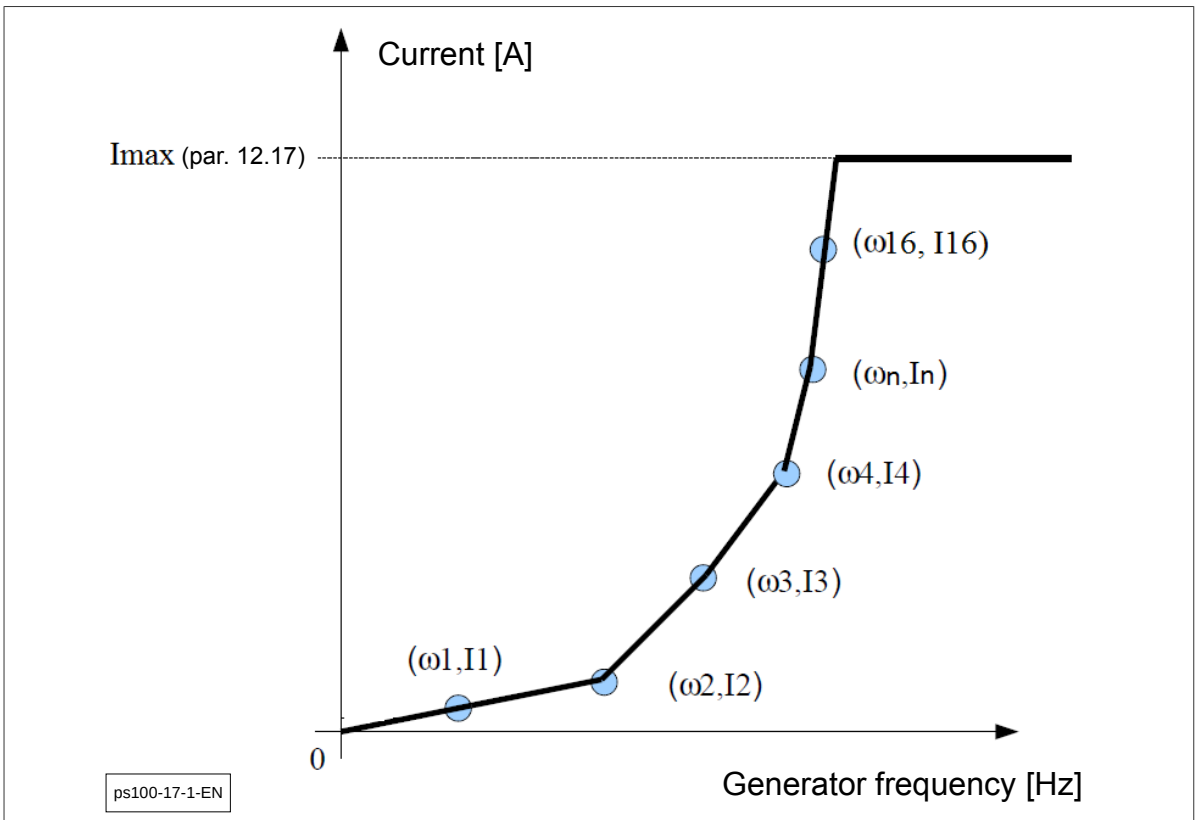

Pic. 7.1. 16-point characteristic I = f(ω) with superior current limit

7.1. Start/Stop command

The START / STOP command is executed automatically when the DC input voltage will exceed voltage thresholds responsible for it:

a) **Par. 13.5 (group 13, parameter 5) "Uin Auto Start"** – rectified voltage from the input side (renewable source of electricity: wind / water generator, PV panels) above which the inverter will start work (if it was in the STOP state) and begin to transfer energy to the electrical grid.

b) **Par. 13.6 (group 13, parameter 6) "Uin Auto Stop"** – rectified voltage from the input side (renewable energy source) below which the inverter ceases to transfer energy to the mains and goes into *sleep mode*. If the input voltage remains below this level for the time specified in par. 13.13 this inverter will go into a *deep sleep* state.

Sleep state: the mains voltage maintains the voltage in the batteries of the intermediate circuit capacitors, the inverter is ready to start working in a few seconds.

Deep sleep state: the inverter's intermediary circuit is disconnected from the mains, it may take about 1 ÷ 2 min to start working. In this mode, energy consumption is less than in *sleep* mode.

7.2. Dump load resistors

Dump load resistors (not supplied) should be connected to proper terminals – see pic 5.1. The dump load resistors relays have switching capacity in the category AC1: 16A.

Dump load resistors resistors will be switch on in four cases:

a) generator's RMS voltage will exceed the value from the parameter **11.1 (U RMS gen. volt.)**,
b) generator's frequency will exceed the value set in the parameter **11.2 (Gen. break. freq.)**,
c) the lack of an electrical grid,
d) during a failure.

7.3. The internal process of switching ON the inverter in on-grid mode

- After connecting to the electrical grid, the inverter with PV inputs monitors the panel voltage; the inverter with generator input first disconnects the load dump resistors and starts to monitor the generator voltage and frequency.
- The inverter checks whether the voltage and frequency of the network is correct.
- By collecting energy from a source connected to the input, it increases the voltage in the DC circuit to the level suitable for switching on the power network.
- Performs synchronization with the electrical grid.
- If the voltage received from the renewable source is high enough (threshold defined by parameter 13.5), the MPPT algorithm starts and the solar panels load according to the MPPT algorithm or generator according to the curve introduced in group 1. The obtained electricity is sent to the electrical grid.

8. Setting the clock

The inverter has an internal RTC clock, which is used to synchronize the recorded data about device operation. To set the clock, select the CLOCK option in the MAIN MENU and press <OK>, it will open the screen to change the time settings. The inverter has the option of setting the date in YYYY-MM-DD format and hours in GG-MM format. To navigate through individual items, use the <right> and <left> keys to change the value <up>, <down>. The exit and saving of changes is done by the <OK> key, while the cancellation of changes and exit by pressing the <ESC> key.

Note: the inverter does not support automatic changeover to summer / winter time.

9. Digital inputs and outputs

The inverter has 5 digital inputs 5Vdc, R_{IN} > 300Ω and 3 digital relay outputs with 2A switching power 230Vac. On the digital inputs terminal block there is also 5Vdc voltage terminal available to operate digital inputs and any external devices with a maximum current consumption of 50mA.

Fig. 9.1 shows the view of the terminal blocks on the PS100-WT inverter. To view the status of digital inputs and outputs enter the I/O PREVIEW in the MAIN MENU of the inverter.

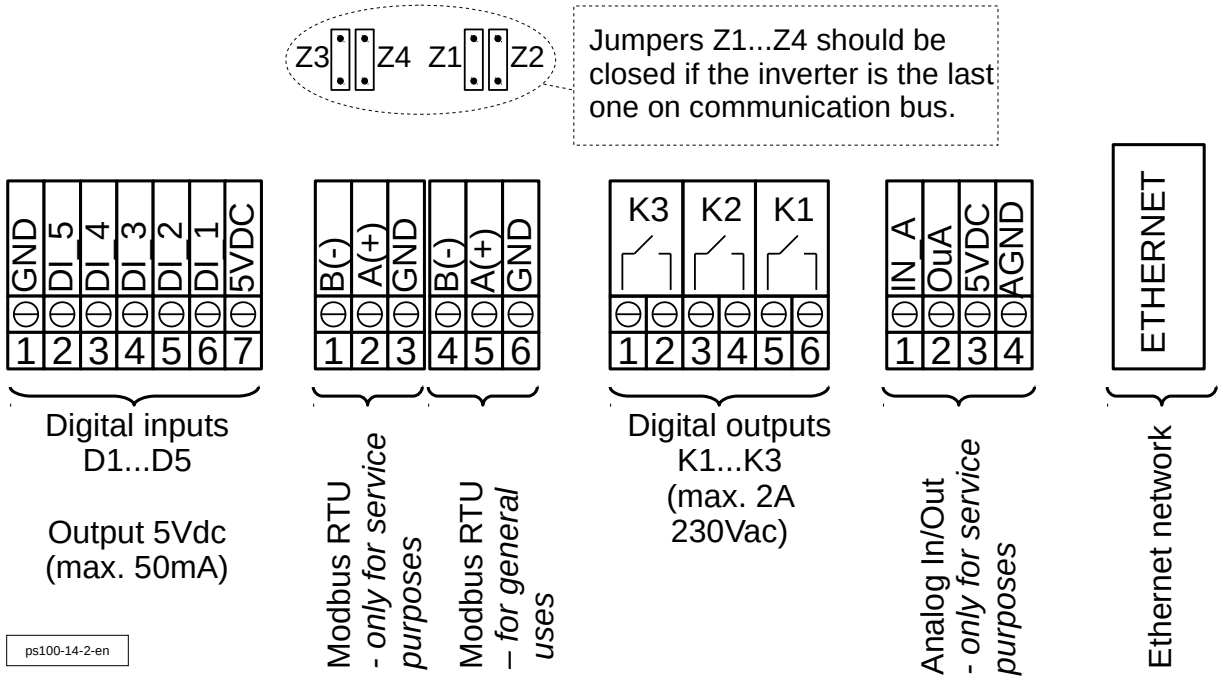

Rys.9.1. 9. Digital inputs and outputs terminals -PS100-WT

By default the inverter uses three digital outputs K1, K2, K3 to adjust the frequency of the generator if the wind turbine is equipped with a tail - chapter *9.1. Generator load control* on page 20 and digital input DI_2 for operating an optional anemometer (anemometer) - see chapter *9.2 Anemometer* on page 21.

9.1. Generator load control

The PS100 inverter, in addition to the turbine run-out protection, is adapted to regulate the frequency of the generator (and thus the power generated) by switching ON the dump load resistors.

Figure 9.2 shows the principle of controlling the dump load resistors.

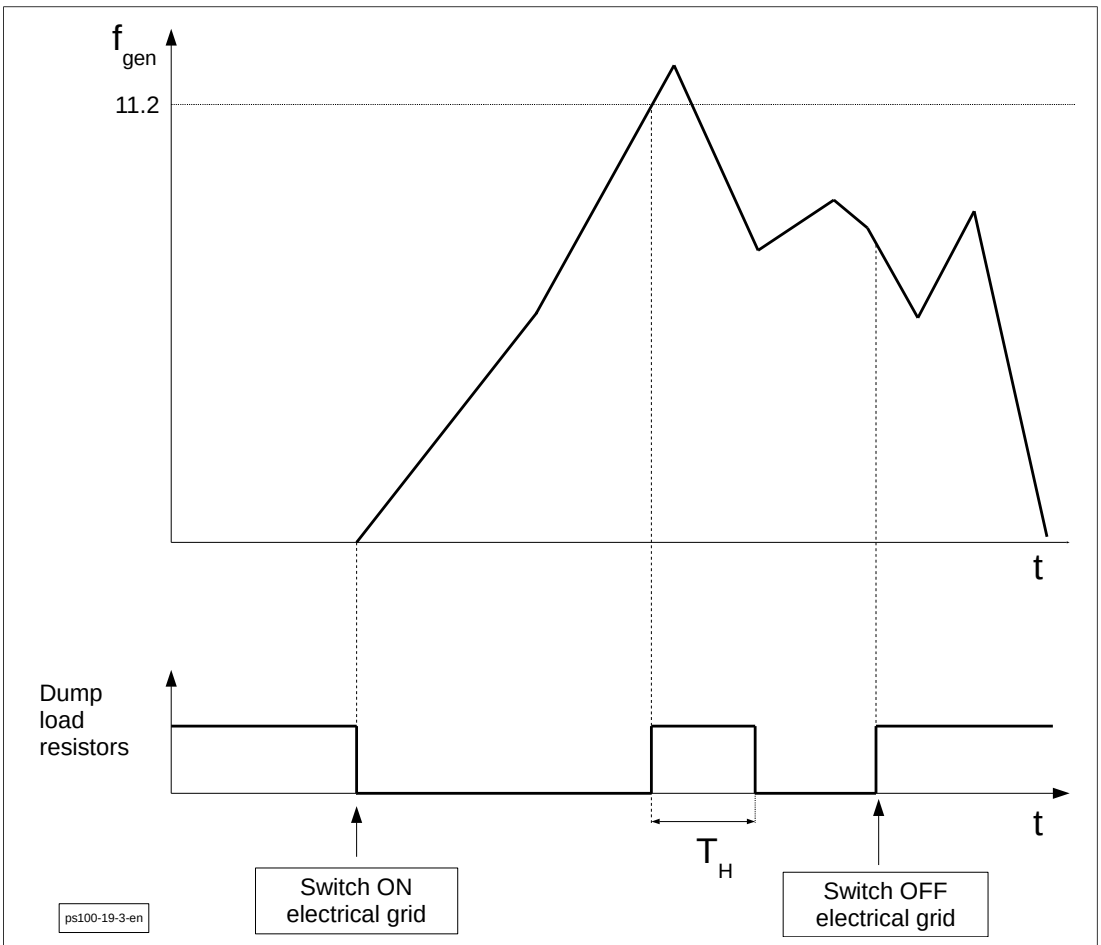

Rys. 9.2. The principle of controlling the dump load resistors

The inverter continuously measures the frequency and voltage of the generator, and compares them to the saved settings in the inverter's memory (group 11).

To prevent the generator from detaching, use dump load resistors. Parameter 11.2 determines the frequency threshold of the generator above which the resistors are switched ON for the braking time T_H,

in which the frequency of the generator drops below the threshold value reduced o hysteresis specified in parameter 11.4, however not shorter than the time set in parameter 11.3.

Additionally the inverter can react to exceeding the voltage thresholds. Parameter 11.1 is used to determine the voltage level that triggers the activation of load resistors.

In the event of any failure, the system switch ON the dump load resistors.

Table 9.1. Control of the dump load resistors - group 11 (service group, password protected)

No.	Name	Description
1	"U RMS gen. volt. [V]	RMS generator voltage that a dump load resistors are switched ON (8A / 250 Vac NC contacts)
2	Gen. break. freq. [Hz]	Frequency of the generator that a dump load resistors are switched ON
3	Min. gen. break [s]	Minimum switching ON time of a dump load resistors
4	Break hist. off [%]	Hysteresis specified in % in relation to the values given in par. 1 and 2

9.2. Anemometer

The inverter works with anemometer with open collector type (OC) output or reed relay output. The maximum frequency must be less than 1 kHz. It is possible to get a supply voltage to anemometer from the 5Vdc output, provided that the maximum load current of 50mA is not exceeded. Fig. 9.3 shows the connection diagram of the anemometer on the example of the Fardat NP-3

In order to correctly measure the wind speed, it is necessary to enter wind speed [m/s] corresponding to 10 pulses / second in parameter 11.5. This value is given by the manufacturer of the anemometer (ex. 1.5). The current wind speed is showed in par. 0.26.

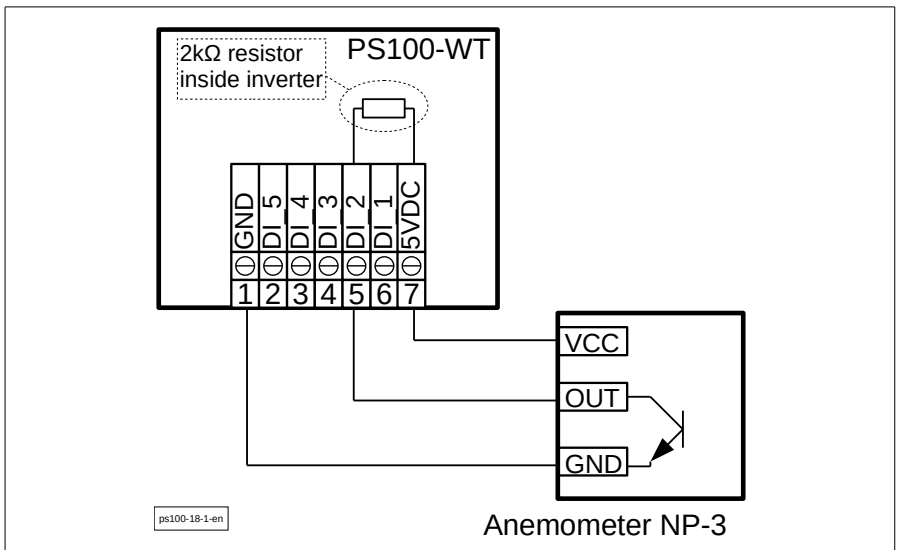

Pic. 9.3. Wiring diagram of the anemometer to the PS100-WT inverter

10. Communication parameters setting

The PS100 inverter is equipped with the RS-485 communication interface and the Ethernet port. This allows the inverter to be controlled by a computer or an external controller. Basic features and the possibilities are:

RS-485:

- communication speed: 1200, 2400, 4800, 9600, 19200, 38400, 57600, 115200 bit/s,
- 8 data bits, lack of parity control; 1 or 1,5 or 2 stop bits,
- transfer protocol: MODBUS mode RTU,
- checking of transfer validity by CRC,
- ModBus address (default 1),
- support of MODBUS commands: command 3 - “read the register” - allows to read individual registers from the converter or block of up to 127 registers. Command 6 - “register write” - allow to write to individual register in the converter.

Ethernet:

- transmission protocol: MODBUS TCP, MODBUS UDP,
- default port of communication: 502,
- internal web page with basic information
- ModBus address (default 1),
- support of MODBUS commands: command 3 - “read the register” - allows to read individual registers from the converter or block of up to 127 registers. Command 6 - “register write” - allow to write to individual register in the converter.

All operations are based on the MODBUS RTU / TCP protocol commands 3 and 6 and they are described in publications on MODBUS protocol.

Addressing is done by querying the 4xxyy parameter, where xx - group number, yy - parameter number. For example, if you want to read parameter 0.3 - the frequency of the network, you should inquire about the address 40003.

10.1. Connecting inverter to the local network

In order to connect the PS100 system to the Ethernet network:

- remove the inverter cover,
- route the LAN cable through the cable gland and connect it to the "Ethernet" connector,
- enter in to "MAC & IP" menu from the control panel,
- set the IP address of the inverter (eg. 192.168.1.253)
- optionally set the MAC address,
- set the PWR LAN to the ON and write a new settings.
- set the PORT (the same is set to connect UDP and TCP) to 502 (the default MODBUS TCP port).

The current parameters of the inverter are displayed via a web browser at the address set in the "MAC & IP" menu (in this example it is http://192.168.1.253).

In order to connect to the inverter from outside (outside the local network), the connection should be redirected to the appropriate IP address and the port set.

11. Graphs

The inverter monitors the input and output power and saves every 15 minutes in internal memory their average values. To view the electric power graphs, select the PLOT MENU option in the MAIN MENU, which will open the window for choosing the date from which the graphs should be displayed. After choosing the appropriate date, the selection is confirmed by pressing <OK>. During displaying the graph, you can use the <up> and <down> keys to select consecutively: total power on present day, power on the first input, power on the second input. To change the date, go back to the date menu with the <ESC> key.

The inverter additionally displays the total electric power graph from the current day on the default screen. Subsequent charts with current data about the inverter work automatically change every few seconds or can be changed after slight knock the device casing.

12. Groups of parameters

GROUP 0 – inverter status parameters (read only)

No.	Name	Description
1	Energy produc. [kWh]	Total amount of produced energy
2	Runtime [rr:dd:gg:mm]	Total working time
3	Grid frequency [Hz]	Electrical grid frequency
4	Grid voltage [V]	Electrical grid frequency
5	Grid current A [A]	1-phase inverters: electrical grid current; 3-phase inverters: electrical grid current in phase A
6	Grid current B [A]	Electrical grid current in phase B – 3-phase inverters
7	Grid current C [A]	Electrical grid current in phase C – 3-phase inverters
8	Power output [W]	Output power
9	Power IN1*) [W]	Input 1 power
10	Power IN2 [W]	Input 2 power
11	UDC voltage [V]	DC link circuit voltage
12	IN1 voltage*) [V]	Input 1 DC voltage
13	IN1 current*) [A]	Input 1 DC current
14	IN2 voltage [V]	Input 2 DC voltage (in inverters with synchronous generator input the AC input voltage first is rectified and the measurement is done after it)
15	IN2 current [A]	Input 2 DC current (in inverters with synchronous generator input the AC input current first is rectified and the measurement is done after it)

16	Turbine freq. [Hz]	Turbine generator frequency
17	UDC cap 1 [V]	DC link 1 circuit voltage
18	UDC cap 2 [V]	DC link 2 circuit voltage
19	Temperature RAD [°C]	Heatsink temperature
20	Temperature MOD [°C]	Power transistors temperature
21	Fault code	Fault number
22	Last fault code	Last fault code
23	Software 1	Software version (communication)
24	Software 2	*Service parameter*
25	Run	Inverter status: 0 : Stop 1 : Run
26	Wind speed [m/s]	Wind speed calculated from the signal from the external pulse wind meter
41	Bat volt [V]	External battery pack voltage
42	Bat curr [A]	Battery current. A negative value means charging the battery, a positive value means discharging the battery
43	Bat temp [^{0}C]	Temperature measured by external PS100 sensor
44	Char temp [^{0}C]	Battery charger power transistors temperature
45	Charger fault	Battery charger fault code

*) applies to an inverter with two inputs (otherwise the displayed value is always zero).

GROUP 1 (service group, password protected)

No.	Name	Description
1	Nom. current turb [A]	Generator DC current
2	Freq. 1 [Hz]	Point 1 of load characteristics frequency
3	Prad I1 [%]	Point 1 of load characteristics current given as percentage of nominal current
...	...	...
32	Freq. 16 [Hz]	Point 16 of load characteristics frequency
33	Prad I16 [%]	Point 16 of load characteristics current given as percentage of nominal current

GROUP 2 (service group, password protected)

No.	Name	Description
1	Parameter set	Upload default parameters settings
2	Clear chart	Clear produced energy chart data
3	Clear op. time	Clear operating time timer
4	Clear prod. energy	Clear produced energy counter data
5	Inverter power	Nominal power of inverter
6	*SPI lookup*	*Service parameter*

GROUP 10 (service group, password protected) – charger parameters (for inverters with built-in battery charger)

No.	Name	Description
1	UdcOnBreak [V]	*Service parameter*
2	UdcOnCharge [V]	*Service parameter*
3	UdcOffCharge [V]	*Service parameter*
4	CurrentLimitCharge [A]	Charge current limit
5	CurrentLimitDischarge [A]	Discharge current limit
6	UmaxBattery [V]	Maximum voltage limit of battery pack
7	UminBattery [V]	Minimum voltage limit of battery pack
8	TmaxBattery [^{0}C]	Maximum temperature limit of battery pack
9	BlockRun	Lock inverter operation
10	UnBattery [V]	Nominal voltage of a battery pack
11	UIIBattery [V]	The voltage value below which a battery pack will be charged from an electrical grid

GROUP 11 (service group, password protected) - control of the dump load resistors

No.	Name	Description
1	"U RMS gen. volt. [V]	RMS generator voltage that a dump load resistors are switched ON (8A / 250 Vac NC contacts)
2	Gen. break. freq. [Hz]	Frequency of the generator that a dump load resistors are switched ON
3	Min. gen. break [s]	Minimum switching ON time of a dump load resistors
4	Break hist. off [%]	Hysteresis specified in % in relation to the values given in par. 1 and 2
5	Meter/10imp [m/s]	Wind speed corresponding to 10 pulses from an anemometer
6	Tail freq max [Hz]	The frequency of the generator above which the K2 relay is activated
7	Tail freq min [Hz]	The frequency of the generator below which the K1 relay is activated
8	Tail freq opt [Hz]	The frequency of the generator beyond which the relay K1 or K2 is deactivated
9	Tail Urms max [V]	The voltage above which the K2 relay is activated and the relay K1 is deactivated (if necessary)
10	Tail t1 [s]	The minimum turn-on time for the K2 relay
11	Thyristor fault	*Service parameter*

GROUP 12 (service group, password protected) – output parameters

No.	Name	Description
1	Uin Auto Stop Boost [V]	Minimal DC voltage allowing the generator to be loaded
2	*Uref boost [V]*	*Service parameter*
3	*kp U boost*	*Service parameter*
4	*Ti U boost [ms]*	*Service parameter*
5	*kp I boost*	*Service parameter*
6	*Ti I boost*	*Service parameter*
7	*Channel 1 fill [%]*	*Service parameter*
8	*Channel 2 fill [%]*	*Service parameter*
9	*MPPT refresh time [s]*	*Service parameter*
10	*Power hysteresis [W]*	*Service parameter*

No.	Name	Description
11	*kt constant step*	*Service parameter*
12	*Alfa min*	*Service parameter*
13	*Alfa max*	*Service parameter*
14	*Max fill 1 [%]*	*Service parameter*
15	*Max fill 2 [%]*	*Service parameter*
16	*DC curr limit 1 [A]*	*Service parameter*
17	DC curr limit 2 [A]	The maximum DC current of the generator load
18	MPPT type	Choosing the way of loading a generator: 1: load depending on the rotation speed, based on the characteristic from group 1 2: load depending on the filtered rotation speed, based on the characteristics of group 1 3: constant load based on the value set in par. 12.17
19	*On/Off Boost*	*Service parameter*
20	*stalaFiltrUser [ms]*	*Service parameter*
21	*stalaFiltrZadPradu [ms]*	*Service parameter*
22	*czasRampIref [s]*	*Service parameter*
23	*autoLimPraduSieci*	*Service parameter*
24	*kpRegPraduUser*	*Service parameter*
25	*TiRegPraduUser [ms]*	*Service parameter*
26	*Measur. V_wind*	*Service parameter*

GROUP 13 (service group, password protected) – output parameters

No.	Name	Description
1	Run mode	0 : Off-grid 1 : On-grid 2 : auto on-off-grid
2	*Contact. out ON*	*Service parameter*
3	*Contact charge ON*	*Service parameter*
4	Output voltage [V]	Output voltage when the parameter 13.1 is set to <**0:„Off-grid”**> or <**2:„auto on-off-grid”**>
5	Uin Auto Start [V]	The DC input voltage of the generator (rectified AC voltage) over which one can start to load the generator and execute the START command
6	Uin Auto Stop [V]	The DC input voltage of the generator (rectified AC) below which the inverter will stop
7	Uin disc. grid [V]	DC input voltage of the generator (rectified AC voltage), below which the countdown time will start (time is set in par. 13.13). This features is used to reduce energy consumption only in "**On-grid**" mode - par. **13.1**
8	*High curr. value [A]*	*Service parameter*
9	*Grid curr. limit [A]*	*Service parameter*
10	*kp out curr.*	*Service parameter*
11	*ki out curr.*	*Service parameter*
12	*Modulation type*	*Service parameter*
13	Grid off time [min]	Time after which the inverter will be disconnected from the power supply to reduce power consumption, in a situation where the DC input voltage will fall below the level set in par. 13.7
14	Fault reset	Manual fault reset, use the sequence: 0 → (wait 3 seconds) → 1 → (wait 3 seconds) → 0
15	On/Off AutoStart	Auto-start setting: 0 : manual – see par. 13.17 1 : auto – according to parameters **12.1**, **13.5** and **13.6**
16	On/Off Restart	Switch ON (1) / Switch OFF (0): automatic resetting of the fault code
17	Start/Stop	Manual START/STOP command
18	*Udc Ref AcR [V]*	*Service parameter*
19	*Anti island*	*Service parameter*

13. Faults

The occurrence of the fault is indicated by the red diode lighting up (fig. 6.1). The current fault number can be read in parameter 0.21. Previous failure number is stored in par. 0.22. Table 13.1 lists the numbers of failures with their descriptions.

After a cause that could damage the inverter, the system goes into fault state. Depending on the setting of the par. 13.16:

a) par. 13.16 **„On/Off Restart" = 0** (turn off): the red LED will lighting up and the inverter will remain in a fault state until it is erased by the user,

b) par. 13.16 **„On/Off Restart" = 1** (turn on): the inverter will try to resume itself.
Explanation: the inverter after 10 seconds will automatically delete the error message and try to resume operation. In the situation when the same failure repeats three times, the inverter will go into fault state, remain in it until it is erased by the user and the red LED will be lighting up continuously on the display.

Table 13.1. List of fault codes

Fault No.	Fault Description	How to fix it
0	No fault	-
1	High temperature: the heat sink temperature exceeded 85 ºC.	Check efficiency of ventilation. Wait until the device has cooled down.
2	Temperature sensor failure	Contact the service.
10	CRC error: invalid internal storage checksum.	Load default parameters, contact the service.
20	Earthing: too high leakage current.	Check the system connections.
30	High Udc voltage: too high voltage on the DC link capacitors.	1. Check the configuration of electrical connection of photovoltaic panels (too many PV panels in series connection) 2. Check the connection of the dump load resistor when using a synchronous generator.
31	Input 1 voltage too high	
32	Input 2 voltage too high	
36	Voltage ripples in the input voltage	1. Check the correct connection of the installation. 2. Check the value of phase-to-phase voltages in the generator.
37	Low Udc: too low voltage on the DC link capacitors.	Check if the power of the energy source is sufficient or higher than the power of the loads connected to the inverter.
38	High Udc - hardware failure: too high voltage on the DC link capacitors.	1. Check the configuration of electrical connection of photovoltaic panels (too many PV panels in series connection) 2. Check the connection of the dump load resistor when using a synchronous generator.
50	Short circuit - hardware failure: hardware protection has recorded the occurrence of transistor short-circuits.	Check the connecting the power wires.
60	High current - hardware failure: the amplitude of the current from the RESs or electrical grid has reached a value in excess of the limit.	1. Check the input current measurement and the voltage measurement in the DC-link circuit. 2. Check the reference voltage in the DC-link circuit.
61	High current on input 1: the amplitude of the input current at input 1 has exceeded the limit.	
62	High current on input 2: the amplitude of the input current at input 2 has exceeded the limit.	
65	Too high output current: the amplitude of the current send to the electric grid reaches a value exceeding the limit.	

Fault No.	Fault Description	How to fix it
66	Overload: long-term value of the output current exceed the nominal current.	1. Check that the power of the connected loads does not exceed the inverter power. 2. Check the cosφ of the installed loads.
67	Output voltage dips: the value of the generated voltage has dropped below the threshold.	1. Check that the power of the loads during their start-up is not greater than 150% of the inverter's rated power.
70	Varistor failure: failure of the varistors has been detected.	Contact the service.
71	Low input 1 resistance: too low resistance was detected between input 1 and PE.	1. Check the installation wires. 2. Measure the resistance of the installation poles relative to PE.
72	Low input 2 resistance: too low resistance was detected between input 2 and PE.	
73	Low -DC resistance: too low resistance was detected between i-DC and PE.	
80	Timeout: exceeding the response time in the internal communication bus of the inverter.	1. Check the connection of communication wires inside the inverter. 2. In case of frequent failures contact the service.
81	Communication error: erroneous data in the inverter's internal communication bus.	
91	Low electric grid frequency – work state: the electric grid frequency is too low or inverter measurement module is damaged	1. Check the electrical grid frequency. 2. In case of frequent failures contact the service.
92	high electric grid frequency – work state: the electric grid frequency is too high or inverter measurement module is damaged	
93	low electric grid voltage – work state: the electric grid RMS voltage is too low or inverter measurement module is damaged.	1. Check the electrical grid voltage. 2. In case of frequent failures contact the service.
94	high electric grid voltage – work state: the electric grid RMS voltage is too high or inverter measurement module is damaged.	
95	Uref limit: electrical grid is no connected to the inverter – anty-islanding protection	1. Check the electrical grid wires, protection fuses, and be be sure main switch power is ON.
96	Low electrical grid frequency – monitoring state: the frequency of the electrical grid measured before the inverter starts working is too low or the inverter measuring module is damaged.	1. Check the electrical grid frequency. 2. In case of frequent failures contact the service.
97	High electrical grid frequency – monitoring state: the frequency of the electrical grid measured before the inverter starts working is too high or the inverter measuring module is damaged.	
98	Low electric grid voltage – monitoring state: the electric grid RMS voltage is too low or inverter measurement module is damaged.	1. Check the electrical grid voltage. 2. In case of frequent failures contact the service.
99	High electric grid voltage – monitoring state: the electric grid RMS voltage is too high or inverter measurement module is damaged.	

Note: The inverter monitors the electrical grid for 60 seconds before starting work. After a failure with incorrect electrical parameters in the grid (fault 91 ÷ 94) or failure of the grid current controller (fault 95), the inverter also monitors the electrical grid for 60 seconds before restarting.

14. Ordering information

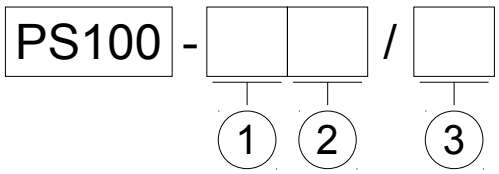

1. Input type:
   - **PV** – photovoltaic:
     - 1 kW inverters has one MPPT input
     - 3 kW and 5.5 kW inverters have two MPPT inputs
   - **WT** – permanent magnet generator: one AC input
   - **H** – hybrid:
     - one photovoltaic input, max. 3 kW,
     - one permanent magnet generator input, max. 3 kW.

   Note: the total power of the connected sources must not exceed the rated power inverter
2. Built-in battery charger module:
   - „**without sign”** – not present
   - **+BAT** - present
3. Power of inverter:
   - **1 kW**
   - **3 kW**
   - **5.5 kW**

Ordering examples:

PS100-PV/5,5kW: photovoltaic inverter 5,5 kW.
PS100-PV+BAT/5.5kW: photovoltaic inverter 5.5 kW with built-in battery charger.
PS100-WT/5,5kW: wind/water turbine inverter 5,5 kW.
PS100-WT+BAT/5,5kW: wind/water turbine inverter 5,5 kW with built-in battery charger.
PS100-H/5,5kW: hybrid inverter 5,5 kW with one 3 kW photovoltaic input and one 3kW generator input; total input power must not exceed 5,5 kW.
PS100-H+BAT/5,5kW: hybrid inverter 5,5 kW (as above) with battery charger.

15. Warranty conditions

The system is covered by the warranty in accordance with the information contained in the Warranty Card.

dtr_PS100-WT_v5.1 en-pv1.1, 27/09/18

16. EU Declaration Of Conformity

EU DECLARATION OF CONFORMITY

We:

Manufacturer's name:	**Zakład Energoelektroniki TWERD** **Michał Twerd**
Manufacturer's address:	**Aleksandrowska 28-30** **87-100 Toruń, Poland**
Phone:	**+48 56 654-60-91**
WWW, e-mail:	**www.twerd.pl twerd@twerd.pl**

Declare at our own responsibility, that product:

Product name:	**Renewable energy source Inverter**
Type:	**PS100**
Power range:	**1 kW ÷ 5,5 kW**

installed and used according to *User's Manual* recommendations meets the requirements of Polish Standards:

Safety:	**PN-EN 50178:2003** **PN-EN 60204-1:2010** **PN-EN 61800-5-1:2007**
EMC:	**PN-EN 61800-3:2008**

which are equivalent to European Standards, harmonized with directives:

2014/35/EU Low Voltage Devices (LVD)
2014/30/EU Electromagnetic Compatibility (EMC)

Zakład Energoelektroniki TWERD - Toruń
mgr inż. Michał Twerd

Zakład Energoelektroniki TWERD
Michał Twerd
ul. Aleksandrowska 28-30, 87-100 Toruń
tel. 56 654 60 91
NIP 879-000-81-65 REGON 870520770

MSc. Michał Twerd (Company owner)

Date: 2018.06.19

Zakład Energoelektroniki TWERD Sp. z o.o.
(TWERD Power Electronics Ltd.)

87-100 Toruń
ul. Aleksandrowska 28-30

tel: +48 56 654 60 91
twerd@twerd.pl
www.twerd.pl

DESIGN – PRODUCTION - SERVICE